fan connector

File: fan connector.kicad_sch

10 pin front disk backplane connector

File: 10 pin front disk backplane connector.kicad_sch

4 + 6 pin 8SFF backplane connectors

File: 4 + 6 pin 8SFF backplane connectors.kicad_sch

front panel IO connector

File: front panel IO connector.kicad_sch

Orqa – https://github.com/Orqa

Sheet: /
File: HPE dl360 gen9.kicad_sch

Title:

Size: A4	Date: 2026-02-07	**Rev: 01**
KiCad E.D.A. 9.0.6		Id: 1/5

BE AWARE THIS SCHEMATIC IS OF CONNECTOR ON PCB

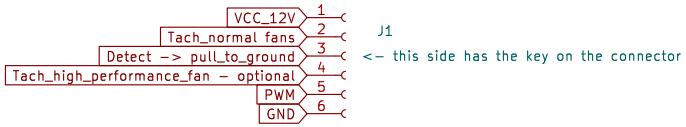

Orqa - https://github.com/Orqa

Sheet: /fan connector/
File: fan connector.kicad_sch

Title: fan connector

Size: A4	Date: 2026-02-08	**Rev: 01**
KiCad E.D.A. 9.0.6		Id: 2/5

BE AWARE THIS SCHEMATIC IS OF CONNECTOR ON PCB

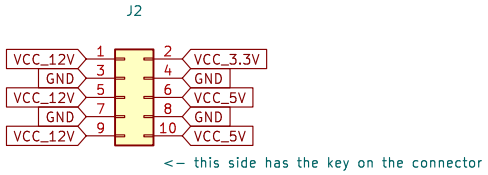

Orqa – https://github.com/Orqa

Sheet: /10 pin front disk backplane connector/
File: 10 pin front disk backplane connector.kicad_sch

Title: 10 pin front disk backplane connector

Size: A4	Date: 2026-02-08	Rev: 01
KiCad E.D.A. 9.0.6		Id: 3/5

BE AWARE THIS SCHEMATIC IS OF CONNECTOR ON PCB

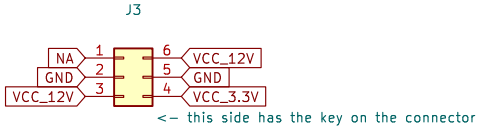

Orqa – https://github.com/Orqa

Sheet: /4 + 6 pin 8SFF backplane connectors/
File: 4 + 6 pin 8SFF backplane connectors.kicad_sch

Title: 4 + 6 pin 8SFF backplane connectors

Size: A4	Date: 2026-02-08	**Rev: 01**
KiCad E.D.A. 9.0.6		Id: 4/5

BE AWARE THIS SCHEMATIC IS OF CONNECTOR ON PCB

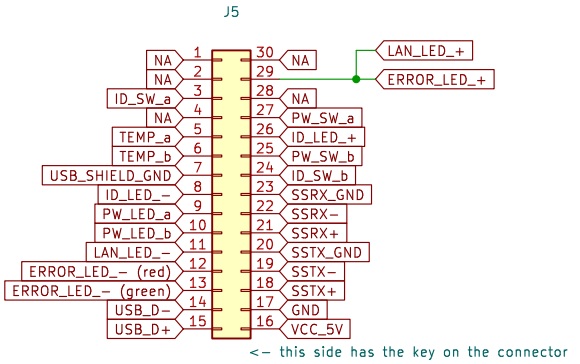

BE AWARE THIS SCHEMATIC IS OF CONNECTOR ON PCB

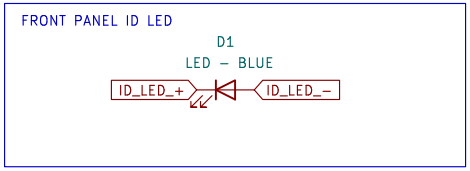

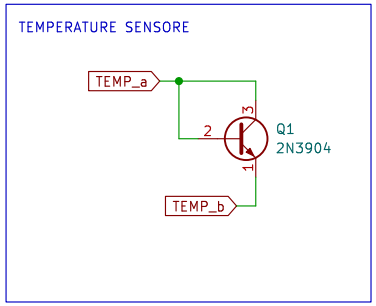

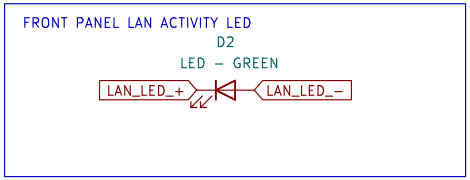

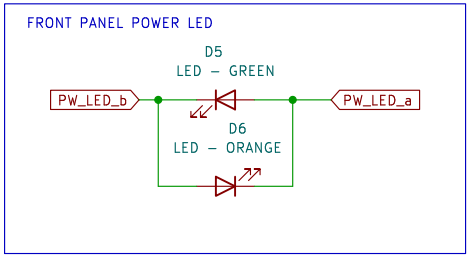

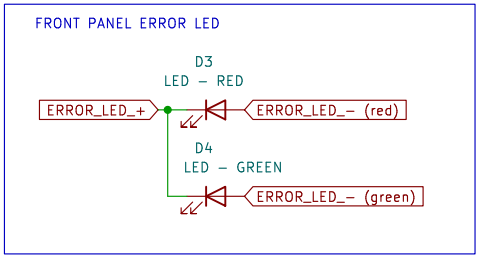

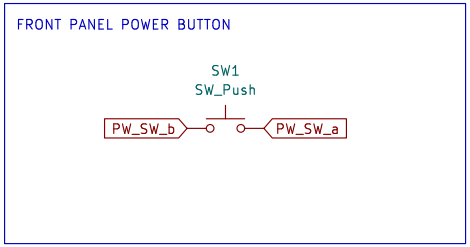

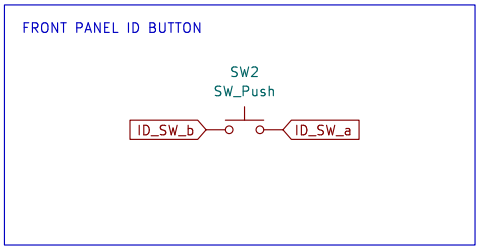

Orqa – https://github.com/Orqa

Sheet: /front panel IO connector/
File: front panel IO connector.kicad_sch

Title: front panel IO connector

Size: A4	Date: 2026-02-08	**Rev: 01**
KiCad E.D.A. 9.0.6		Id: 5/5